Cambridge International AS & A Level

Cambridge International Examinations
Cambridge International Advanced Subsidiary and Advanced Level

CANDIDATE NAME

CENTRE NUMBER

CANDIDATE NUMBER

3647544081

PHYSICS **9702/33**

Paper 3 Advanced Practical Skills 1 **February/March 2016**

2 hours

Candidates answer on the Question Paper.

Additional Materials: As listed in the Confidential Instructions.

READ THESE INSTRUCTIONS FIRST

Write your Centre number, candidate number and name on all the work you hand in.
Write in dark blue or black pen.
You may use an HB pencil for any diagrams or graphs.
Do not use staples, paper clips, glue or correction fluid.
DO **NOT** WRITE IN ANY BARCODES.

Answer **both** questions.
You will be allowed to work with the apparatus for a maximum of one hour for each question.
You are expected to record all your observations as soon as these observations are made, and to plan the presentation of the records so that it is not necessary to make a fair copy of them.
You are reminded of the need for good English and clear presentation in your answers.

Electronic calculators may be used.
You may lose marks if you do not show your working or if you do not use appropriate units.

Additional answer paper and graph paper should be used only if it becomes necessary to do so.

At the end of the examination, fasten all your work securely together.
The number of marks is given in brackets [ ] at the end of each question or part question.

For Examiner's Use	
1	
2	
Total	

This document consists of **11** printed pages and **1** blank page.

© UCLES 2016

CAMBRIDGE International Examinations

[Turn over

You may not need to use all of the materials provided.

1 In this experiment you will investigate the behaviour of a sphere rolling across a sloping board.

(a) Pass the thread through the hole in the board and clip it in place with the spring clip. Set up the apparatus as shown in Fig. 1.1, with the board at an angle of approximately 45° to the bench. The length of the thread between the spring clip and the sphere should be approximately 20 cm.

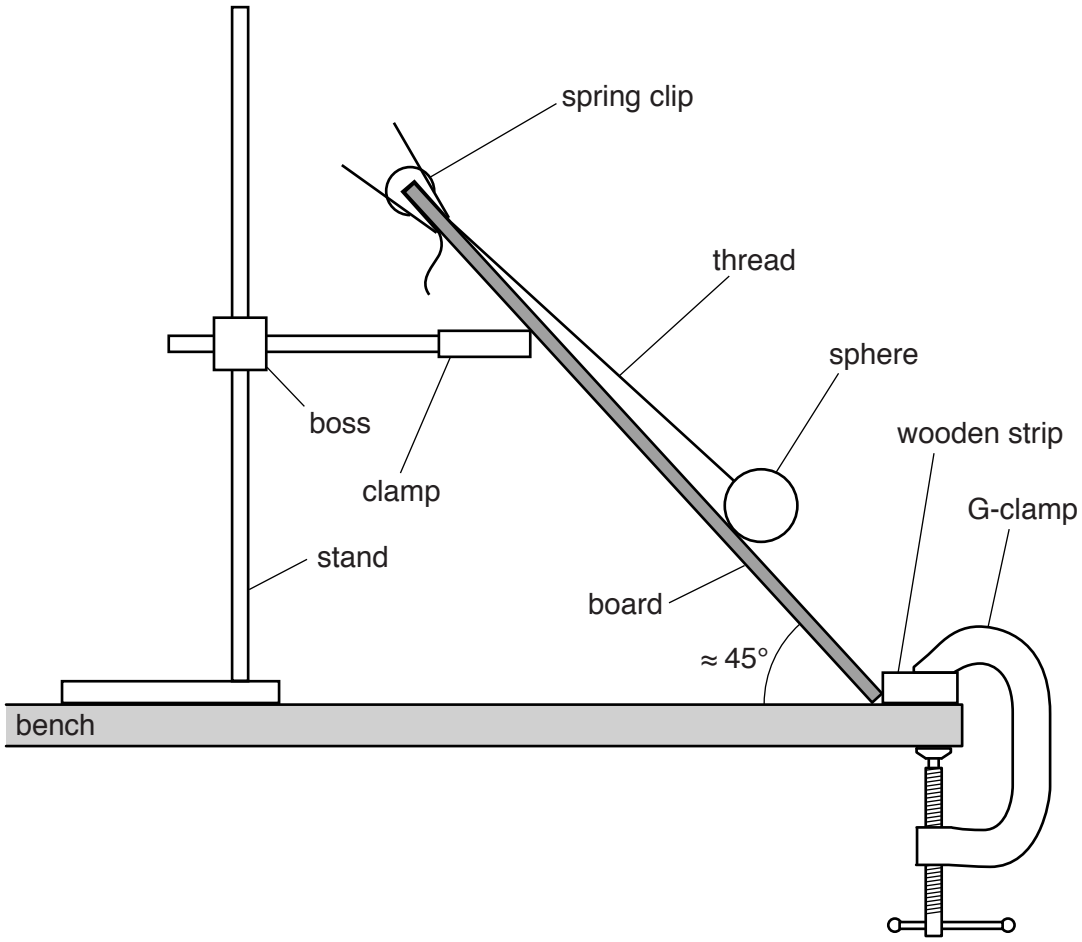

Fig. 1.1 (not to scale)

(b) (i) Measure and record the angle θ between the board and the bench, as shown in Fig. 1.2.

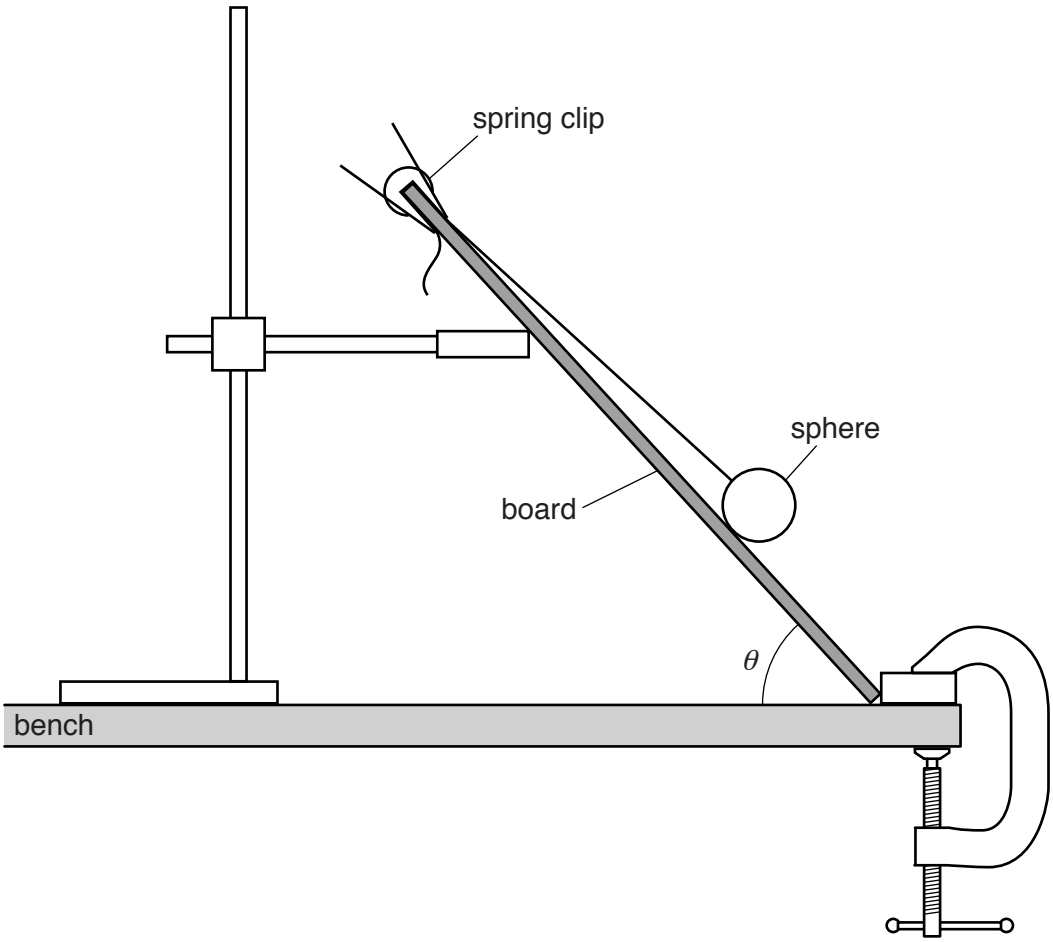

Fig. 1.2 (not to scale)

θ = ...[1]

(ii) Push the sphere to one side. Release the sphere so that it oscillates from side to side.

(iii) Take measurements to find the period T of the oscillations.
Record T.

T = ... s [2]

(c) Change θ by moving the boss and clamp and repeat **(b)** until you have six sets of values for θ and T. Do **not** change the length of the thread between the sphere and the spring clip.

Include values for $\frac{1}{T^3}$ in your table.

[9]

(d) **(i)** Plot a graph of θ on the y-axis against $\frac{1}{T^3}$ on the x-axis. [3]

(ii) Draw the straight line of best fit. [1]

(iii) Determine the gradient and y-intercept of this line.

gradient = ...

y-intercept = ...

[2]

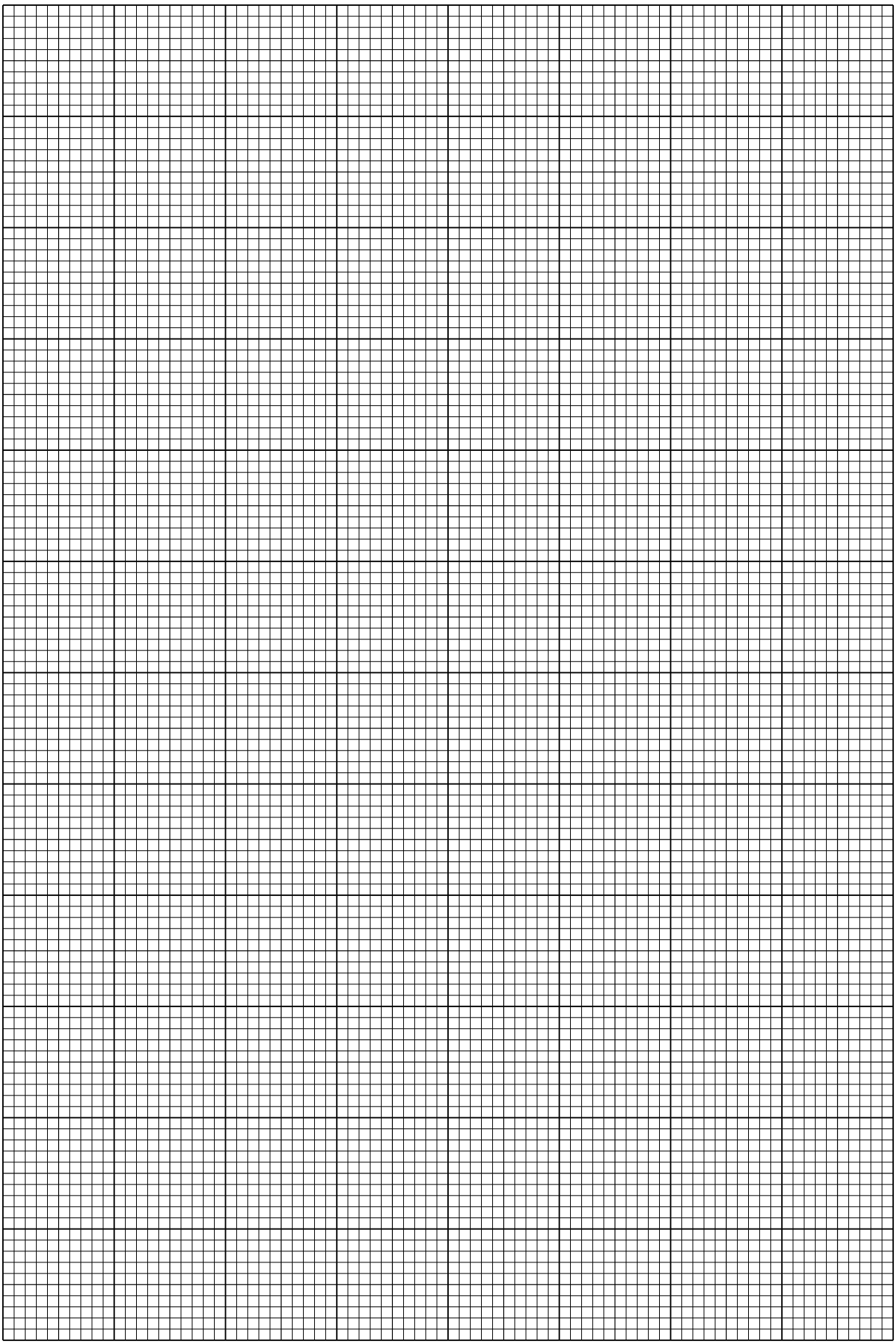

(e) It is suggested that the quantities θ and T are related by the equation

$$\theta = \frac{a}{T^3} + b$$

where a and b are constants.

Use your answers from **(d)(iii)** to determine the values of a and b.
Give appropriate units.

a = ...

b = ...

[2]

[Total: 20]

You may not need to use all of the materials provided.

2 In this experiment you will investigate the motion of a sphere launched from a ramp.

(a) Set up the apparatus as shown in Fig. 2.1. Adjust the height of the clamp so that the launch angle ϕ is approximately 15°.

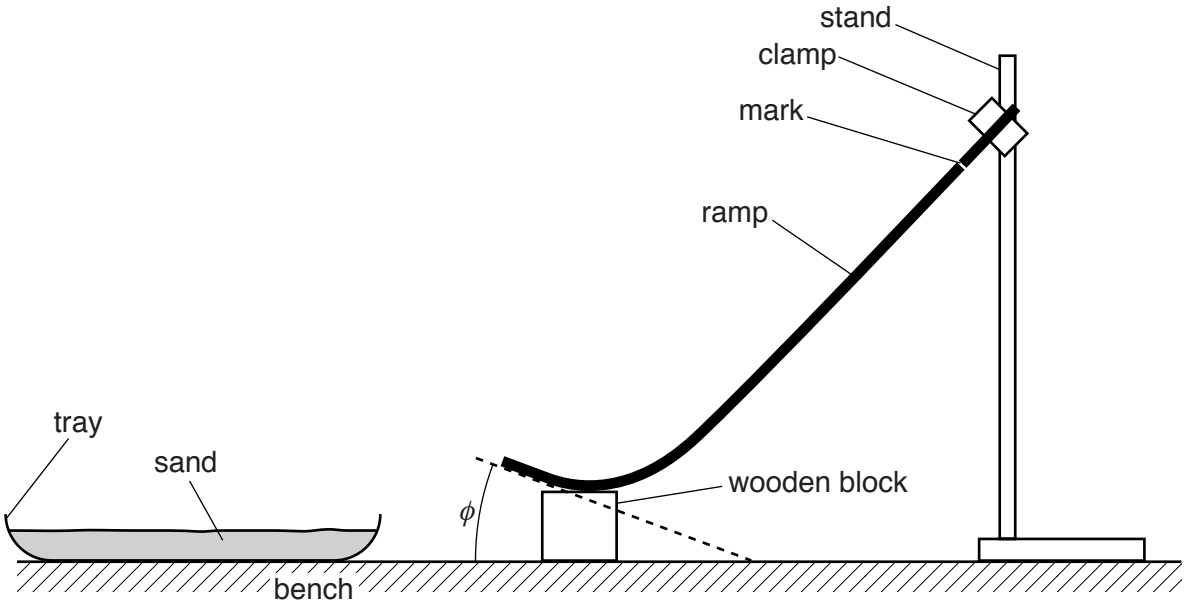

Fig. 2.1 (not to scale)

(b) (i) Measure and record ϕ, as shown in Fig. 2.1.

ϕ = ...[1]

(ii) Measure and record the height h_1 of the mark above the bench, as shown in Fig. 2.2.

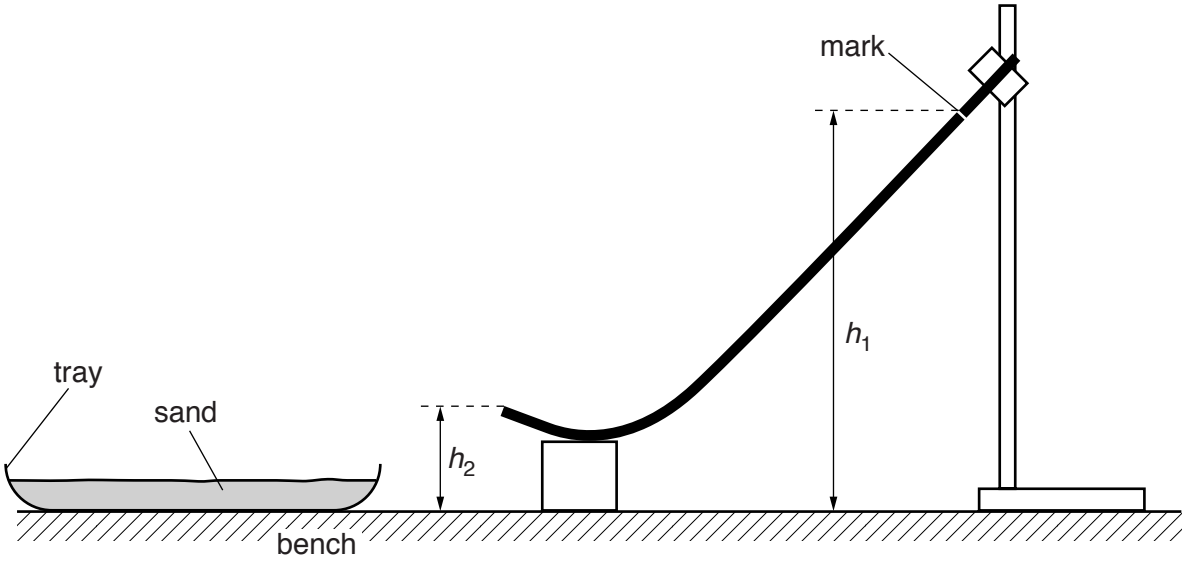

Fig. 2.2 (not to scale)

h_1 = ... cm [1]

(iii) Measure and record the height h_2 of the end of the ramp, as shown in Fig. 2.2.

h_2 = ... cm

(iv) Calculate the speed v of the sphere when it leaves the ramp using the expression

$$v = \sqrt{2g(h_1 - h_2)}$$

where $g = 9.81\,\text{m s}^{-2}$.

v = ...[1]

(c) Justify the number of significant figures you have given for your value of v.

.....

.....

.....[1]

(d) **(i)** Place the smaller sphere on the ramp at the mark. Release the sphere.

(ii) Measure and record the horizontal distance R from the end of the ramp to the landing position of the sphere, as shown in Fig. 2.3.

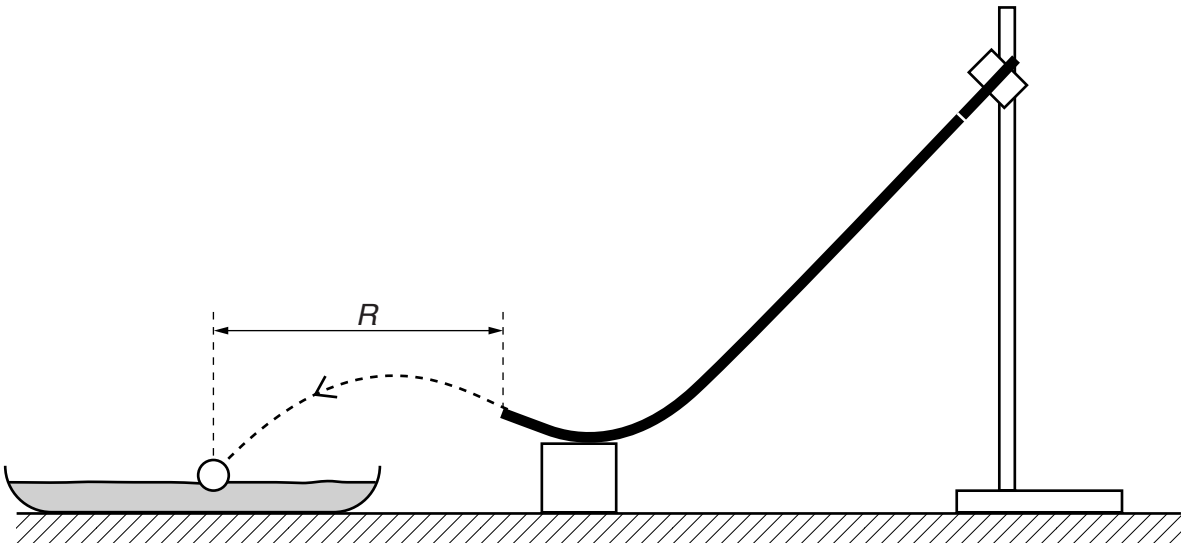

Fig. 2.3 (not to scale)

R = ... cm [2]

(e) Estimate the percentage uncertainty in your value of R.

percentage uncertainty = ...[1]

(f) By lowering the clamp, increase the launch angle ϕ to approximately 25°. Repeat **(b)** and **(d)** using the **same** sphere.

ϕ = ...

h_1 = ... cm

h_2 = ... cm

v = ...

R = ... cm
[3]

(g) It is suggested that the relationship between R, v and ϕ is

$$R = kv\cos\phi$$

where k is a constant.

(i) Using your data, calculate two values of k.

first value of k = ...

second value of k = ...

[1]

(ii) Explain whether your results support the suggested relationship.

.....

.....

.....[1]

(h) (i) Describe four sources of uncertainty or limitations of the procedure for this experiment.

1. .....

.....

2. .....

.....

3. .....

.....

4. .....

.....

[4]

(ii) Describe four improvements that could be made to this experiment. You may suggest the use of other apparatus or different procedures.

1. .....

.....

2. .....

.....

3. .....

.....

4. .....

.....

[4]

[Total: 20]

BLANK PAGE

Permission to reproduce items where third-party owned material protected by copyright is included has been sought and cleared where possible. Every reasonable effort has been made by the publisher (UCLES) to trace copyright holders, but if any items requiring clearance have unwittingly been included, the publisher will be pleased to make amends at the earliest possible opportunity.

To avoid the issue of disclosure of answer-related information to candidates, all copyright acknowledgements are reproduced online in the Cambridge International Examinations Copyright Acknowledgements Booklet. This is produced for each series of examinations and is freely available to download at www.cie.org.uk after the live examination series.

Cambridge International Examinations is part of the Cambridge Assessment Group. Cambridge Assessment is the brand name of University of Cambridge Local Examinations Syndicate (UCLES), which is itself a department of the University of Cambridge.

© UCLES 2016